SINCE 1842

CASE CONSTRUCTION

E-SERIES

CRAWLER EXCAVATORS

CX130E | CX160E | CX180E

HERITAGE
A TRADITION OF INDUSTRY FIRSTS

1842
CASE is founded.

1869
The first CASE portable steam engine - road construction is born.

1957
The first factory-integrated loader/backhoe in the world: a CASE industry first.

1969
CASE begins skid steer loader production.

1977
CASE acquires Poclain, a French brand leader in the excavators market.

1992
Sumitomo becomes supplier to CASE Corporation distributing excavators ranging from 7 to 80 tons.

1998
Global Alliance signed between CASE Corporation and Sumitomo.

2001
CASE introduces the first of its CX excavators, powerful new “thinking machines” designed to enhance productivity through onboard intelligence features.

2007
CX210B is awarded the «Good Desing Award» by the design Academy of Japan.

2008
CX210B wins the 18th «Energy Conservation Award» from the Agency for Natural Resources and Energy of the Japanese Ministry of Economy.

2011
CASE becomes the first construction equipment manufacturer to offer both selective catalytic reduction and cooled exhaust gas recirculation as solutions to meet stringent emissions standards.

2015
CASE launches the new “D-Series” Tier 4 final / EU Stage IV Crawler Excavators.

2018
Stage V production for models CX350D and above, followed by Short Radius models.

2021
CASE introduces the first models of Stage V E-Series Crawler Excavators, featuring new FPT engine, new monitor, enhanced hydraulics and improved connected services.

CRAWLER EXCAVATORS
E-NHANCED GENERATION

ENHANCED QUALITY AND RELIABILITY
Stronger than ever, built to last

+ The reinforced clamp improves the pipe holding force on the boom.
+ The shape and thickness of the inner reinforcement plate increase the boom's durability.
+ The tolerance of the boom and arm cylinder pins has been updated to reduce clatter and play within the bushing.
+ A new stop valve adjustment mechanism has been added for easier piping-valve connection.
+ The more compact assembly of the undercarriage recoil spring on the CX130E, also including the grease cylinder on CX160E / CX180E, facilitates clearing the mud.
+ The CX130E features a reinforced and more durable travel motor, while CX160E / CX180E deliver increased performances in travelling.
+ The upper carrier rollers (on CX160E / CX180E / CX210E / CX250E) have been upgraded for greater durability.

ENHANCED PRECISION AND CONTROLLABILITY
Smooth control, efficient operation – more than ever

The trademark **CASE Intelligent Hydraulic System (CIHS)** is now paired with new work modes and adjustable hydraulic settings to deliver smoother and more efficient operation than the previous generation.

E-SERIES
CRAWLER EXCAVATORS

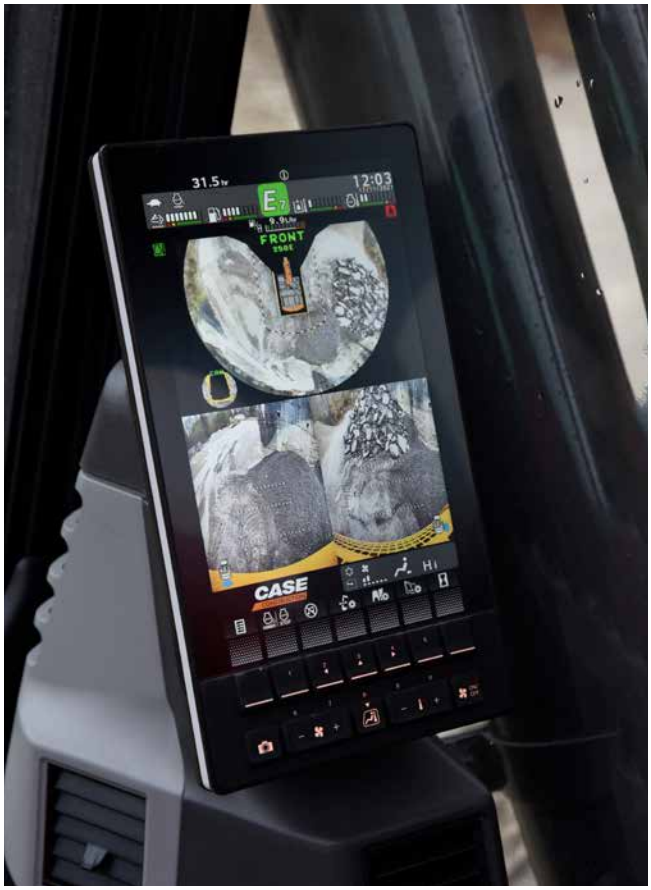

ENHANCED VERSATILITY
A high degree of customization for every task

The new-concept work modes with independent throttle position offer a precise match to the requirements of every task:

SP (Super Power) mode for maximum productivity (as in D-Series) with the throttle set at maximum power.

P (Power) mode replaces H and A mode in D-Series, with throttle settings from 1 to 10.

E (Eco) mode for maximum fuel economy, with throttle settings from 1 to 10.

L (Lifting) mode is optimized for object handling with power boost permanently activated and overload warning system, and throttle settings from 1 to 6.

The choice of available work modes can be locked by the machine owner.

NEW The ground-breaking Eco mode reduces fuel consumption through selective control of engine and pump depending on the movement. It maintains maximum pump torque to deliver high productivity, while minimizing fuel consumption during low effort operations.

The balance of the hydraulic flows can also be customized to suit the operator's preferences:

+ **"Arm In"** vs **"Boom Up"**
+ **"Arm In"** vs **"Swing"**

The E-Series takes versatility even further by enabling the operator to select the type of work tool and input the customizable model number on the machine's monitor. When selecting the flow and pressure settings, they can also set the maximum overflow to protect the attachment.

PRODUCTIVITY
WORK SMART, PRODUCE MORE

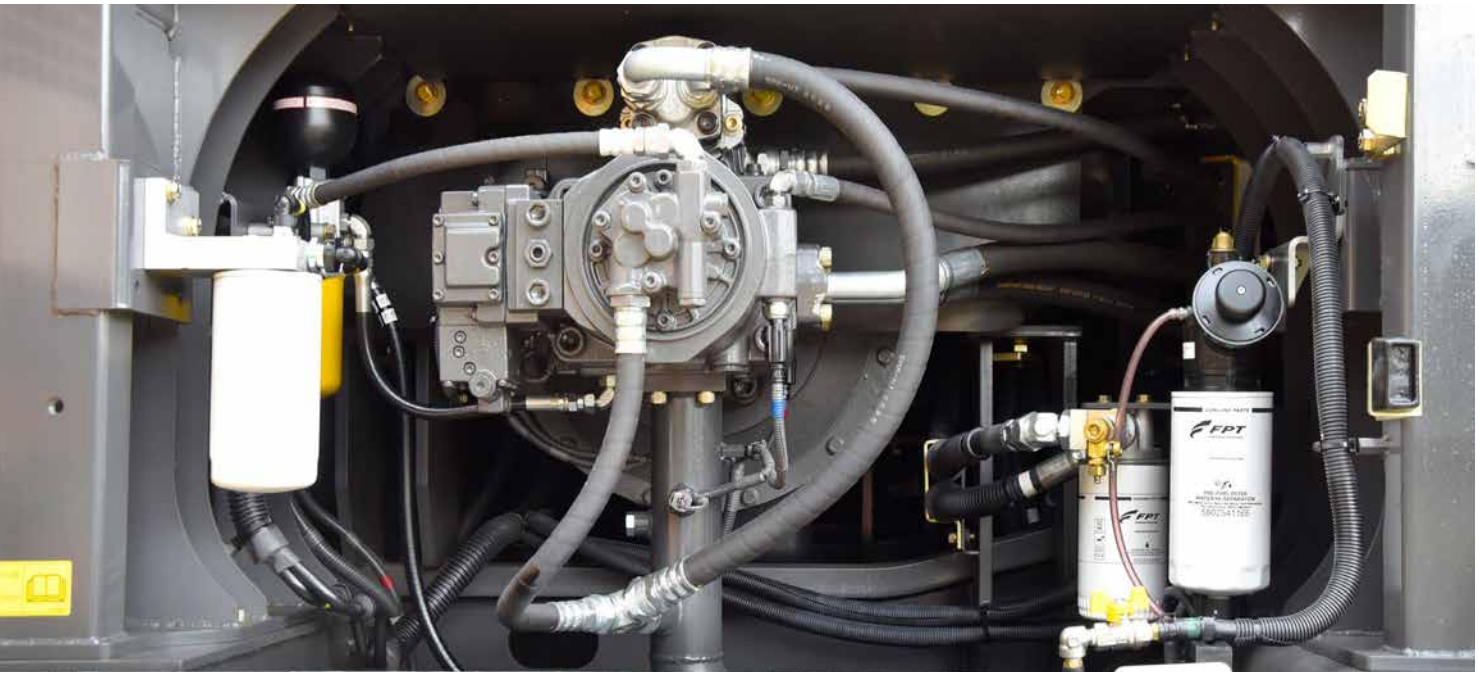

ENHANCED EFFICIENCY
Top performance, high fuel economy

The new-generation E-Series combines the proven energy saving features of the D-Series with new work modes and hydraulic settings to raise the bar on efficiency.

The advanced automatic energy management system inherited from the D-Series consists of six key energy control functionalities:

+ **Pump Torque Control**: prevents drops in engine speed due to overtorque in high load operations while reducing fuel consumption in operations where maximum pump power is not required.
+ **Boom Economy Control**: increases fuel efficiency during boom down and swing movements.
+ **Swing Relief Control**: reduces the initial pump flow while improving control at the start of swing movements to lower fuel consumption.
+ **Spool Stroke Control**: automatically adjusts pressure based on the sensors' feedback, avoiding unnecessary functionality.
+ **Boom Oil Regeneration**: the returning oil from boom down is used to speed up the arm out movement (only from CX210E upward).
+ **Auto Idle / Idle Shutdown**: customizable and manually switchable functions that lower engine rpms after a period of inactivity or shut down the engine after a period of idling.

With all these features, coordinated by the CASE Intelligent Hydraulic System, together with the new FPT engine and improved travel motor for additional mechanical efficiency, the E-Series excavators deliver unprecedented performance and high fuel economy.
CX160E / CX180E hydraulics has been further improved thanks to a 12% increase in the pump flow rate output.

CLEANER POWER
EU Stage V compliant engines

The new FPT NEF engines meet Stage V standards with the innovative HI-eSCR2 solution developed in-house, which only uses a Diesel Oxydation Catalyst and an integrated **maintenance-free** device on the SCR catalyst to achieve this dramatic reduction in emissions.

+ The SCR-on-Filter is “built-for-life” and requires no replacement or mechanical cleaning for its entire guaranteed emission regulation life.
+ The air intake flow is increased by a turbocharger with air-to-air cooling.
+ The multiple injection delivers best-in-class high torque performance at low rpms.
+ **No EGR** valve means 100% fresh air is used for combustion and no extra cooling system is required.

The new Stage V NEF engines can take their low-emission performance even further, as they can operate on **B7 biodiesel** and **HVO** (an even cleaner and more high-quality alternative to biodiesel, with superior performances in cold weathers) and other paraffinic fuels like **GTL** (Gas-to-Liquids), **CTL** (Coal-to-Liquids), **BTL** (Biomass-to-Liquids).

COMFORT RULES
FIRST-CLASS WORK ENVIRONMENT

ENHANCED COMFORT
Ideal working conditions, every day

+ Pressurized cab with improved sealing, wide access space and increased foot space.
+ Ergonomic air-suspended high-back seat with tilt adjustment and heater.
+ Console suspended with the seat and optimized control lever positions: the operator maintains their preferred working posture when adjusting the seat's position.
+ Reduced pedal travel and footrest reduce fatigue during operation.
+ Automatic air conditioning controls integrated in the monitor.
+ Air conditioning performance improved with a cooling upgrade and optimal air vents location.
+ Optimized storage capacity with lunch box tray and cool box, smartphone tray, and two large drink holders.
+ Repositioned lower track rollers reduce vibrations for smoother travelling.
+ Quieter cab with 1 dB lower internal noise compared to D-Series on CX210E, and 3 dB lower on CX250E / CX300E.

SAFETY AND MAINTENANCE
WORK SAFELY IN ALL CONDITIONS

SAFER OPERATION AND ACCESSIBILITY
Safety first, inside and outside the cab

+ Reinforced cab structure ROPS and FOPS compliant.
+ Standard FOPS level 2 head protection.
+ Factory fitted front guard OPG 1 and 2; grill guard available as DIA kit.
+ Factory fitted travel alarm for greater safety on the jobsite around the machine.
+ New auto lever lock safety feature immediately stops machine movement when the operator unintentionally unlocks the gate lock.
+ Seat belt fastened detection.
+ Wide, robust and comfortable steps, and handrail for safe access to the top of the hood.
+ Non-slip plates and top hood cover supported by two gas pistons and secured by two mechanical stops.
+ Wide platform on top of the engine compartment to work safely on the engine box.

SUPERIOR VISIBILITY
Designed for outstanding visibility

Visibility – already outstanding in the D-Series - has been further enhanced:

+ Glazed surface with improved visibility on the right hand side.
+ Bigger monitor (from 7 to 10'') with higher resolution, five configurable buttons and additional menus on the display.
+ Standard rear- and right-hand cameras, and an optional left-hand camera is available for the 270° CASE Maximum View Monitor with revised screen layout.
+ Upgraded cameras for better color balance.
+ Improved front window defrost.
+ New diffusion spray type window washer nozzle ensures better windshield cleaning.
+ LED lights package available for brighter and wider illumination.
+ "Follow me" lights function with selectable off timer.

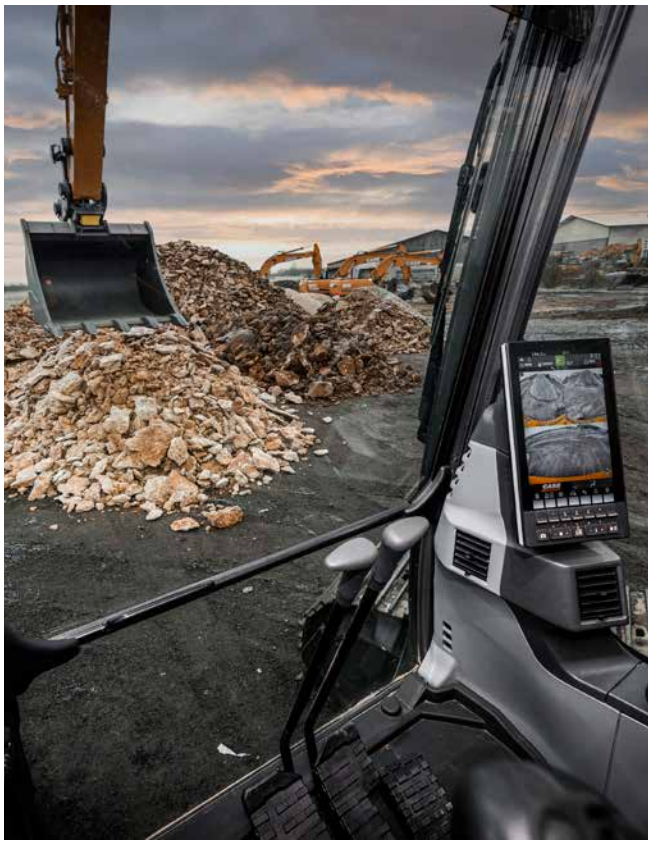

SAFETY AND MAINTENANCE
WORK SAFELY IN ALL CONDITIONS

EASY MAINTENANCE

"Grounded" and connected services solution

+ New extended service intervals for lower maintenance costs:
  - **Engine oil, fuel & oil filters** extended from 500 to 1,000 hours;
  - **AdBlue supply module filter** was 3,000 hours, it goes up to 4,000 hours;
  - **Travel gear oil** extended from 1,000 to 2,000 hours (on CX160E / CX180E).
+ Extended Maintenance System (EMS) bushings provide 1,000 hour greasing intervals on arm and boom pins and 250 hours on the attachment pin.
+ No EGR reduces complexity in the ATS.
+ SCR-on-Filter auto-cleaning device requires no replacement or mechanical cleaning during guaranteed life span.
+ Fuel nozzle with integrated fuel tank float provides better visibility during refilling.
+ Hydraulic oil tank cap with integrated air breather for tool-less refill.
+ Newly added sampling valve in pump room for easier hydraulic oil sampling.
+ Increased washer tank capacity for fewer washer refills.
+ Grease cylinder compact design for easier mud cleaning around carrier rollers on CX160E / CX180E, same result achieved on CX130E by compacting the recoil spring.
+ Two-piece split cab floor mat for simpler cleaning.
+ Radiator shroud with larger opening from the side and additional opening below the upper structure for better accessibility.

+ Air cleaner height change for easier put on and off.
+ Fan belt auto-tensioner requires no manual calibration.
+ Remote diagnostics and assistance, and interactive maintenance with the new bidirectional CASE SiteConnect module and enhanced SiteWatch telematics services.
+ The new aftermarket offering of CASE **FLEETPRO rubber bolt-on pads**, available on CX130E fitted with 500 mm and 600 mm shoes, makes it easy and quick to switch between on- and off-road applications, extending the machine's versatility and improving the customer's profitability.

MAIN REASONS
TO CHOOSE THE NEW E-SERIES

BEST MATCH BETWEEN SPEED AND CONTROLLABILITY

CASE Intelligent Hydraulics System (CIHS) is synonymous and reference in the market for its fastest cycles times, best energy saving performance and smooth control.

ENHANCED QUALITY AND RELIABILITY

CASE excavators are known for their balanced design and first-class components. New improvements to arm, boom and undercarriage structure make them even better.

ENHANCED VERSATILITY

+ ***NEW*** 4 work modes (Super Power, Power, Eco, Lifting)
+ ***NEW*** 10 throttle settings, independent from work mode
+ ***NEW*** arm, boom and swing flow balance customization to suit every application
+ ***NEW*** attachment types and names storable in the display for quicker tools management

ENHANCED EFFICIENCY

+ ***NEW*** Eco mode ensures the best selective engine and pump control, maximizing torque only when needed and saving more fuel
+ ***NEW*** FPT Stage V engine with no EGR, more efficient combustion
+ ***NEW*** improved travel motor durability and performances

ENHANCED CONNECTIVITY

+ ***NEW*** bidirectional CASE SiteConnect module
+ ***NEW*** interactive maintenance capabilities
+ ***NEW*** remote assistance
+ ***NEW*** standard CASE full telematics solution (modem, wiring, harnesses, antenna and 3-year advanced SiteWatch subscription)

SUPERIOR VISIBILITY

+ ***NEW*** 10” LCD monitor – the biggest in the industry – with 5 configurable buttons and new menu functions
+ ***NEW*** front window defrost and washing improvement
+ ***NEW*** greater visibility on the right hand side
+ Optional CASE Maximum View Monitor for optimized all-around visibility
+ LED lighting

ENHANCED COMFORT

+ ***NEW*** console suspended with seat
+ ***NEW*** wide access space and increased foot space
+ ***NEW*** dedicated A/C controls in the monitor, always within easy reach
+ ***NEW*** improved air conditioning with new air vents
+ ***NEW*** smoother travelling with repositioned rollers
+ ***NEW*** quieter environment in the cab

EASY MAINTENANCE

+ ***NEW*** extended 1,000-hour engine oil, fuel & oil filters change interval + 1,000-hour bushing greasing intervals for arm and boom pins
+ ***NEW*** SCR-on-Filter auto-cleaning device – maintenance-free and built-for-life
+ ***NEW*** easy access to hydraulic tank thanks to cap with air breather
+ ***NEW*** split type floor mat
+ ***NEW*** FLEETPRO bolt-on rubber pads aftermarket offering for fast replacement and greater versatility on CX130E.

CLEANER POWER

+ ***NEW*** STAGE V engine by FPT, the European leader, known for its reliability and innovative tradition, with more than 25 years' experience
+ ***NEW*** High Efficiency SCR 2 system, covered by 13 patents
+ ***NEW*** EGR-free
+ ***NEW*** compatible with HVO and synthetic alternative fuels

SAFER OPERATION AND ACCESSIBILITY

+ ROPS cab with FOPS level 2
+ Standard extended handrails and guardrails
+ Factory fitted travel alarm
+ ***NEW*** auto lever lock safety feature

CASE® CONSTRUCTION | SiteWatch™

THE SCIENCE BIT

The CASE SiteWatch telematics system uses a high-tech control unit mounted on each machine to collate information from that machine and from GPS satellites. This data is then sent wirelessly through the mobile communication networks to the CASE Telematics Web Portal.

SITEWATCH: CENTRALISED FLEET CONTROL BENEFITS AT YOUR FINGERTIPS

Measure your true asset availability and optimise it

+ Eliminate the “phantom fleet”: SiteWatch allows to identify spare units or under loaded machines on each site.
+ Become able to reallocate units where they are more needed.
+ Forward maintenance planning is easier since the actualised working hours are always available.
+ Extend the benefits of SiteWatch to the rest of your fleet: SiteWatch can be installed on the units of other brands as well.

Challenge your Total Cost of Ownership!

+ Being able to compare the fuel usage of different machine types will allow you choose the right equipment.
+ Save on transport costs with planned and grouped maintenance tasks.
+ Peace of mind, optimised uptime and lower repair costs: with preventive maintenance you can for example be alerted if the engine needs to be serviced and avoid disruptive breakdown.
+ Be able to compare your asset Return on Investment on different sites.
+ Your equipment is used only during working hours. You can set up alerts so that you know if it is in use during the weekend or at night.
+ Integrate with the programmed maintenance package, which ensures the required services are performed at the right time.

More safety, lower insurance premium

+ Keep thieves away: dissuade them from attacking your asset because it is geo-localised. SiteWatch is hidden so that thieves can’t find it quickly.
+ Your fleet is used only where you decide. You can define a virtual fence and receive an email when a machine exits that perimeter.

CASE EXPERT SUPPORT
ALWAYS WITH YOU

SITECONNECT: PROACTIVE SUPPORT AND REMOTE ASSISTANCE

The SiteConnect module allows to establish a 2-way communication between your machine and your CASE Dealer. They will be able to run remote diagnostics and analyze the machine data before travelling to the unit.

Maximize your machine's uptime

+ Save time as your dealer conducts remote assistance to the operator. The machine can be anywhere while the dealer remotely connects with the machine to do diagnostics.
+ The dealer is supporting you with SiteConnect tools to maximize the uptime for your machine

Optimize service efficiency

+ By enabling your dealer to investigate your asset remotely, allows them to resolve issues in the shortest possible time, in a single visit, with the correct parts and tools.
+ Electronic control units installed on the machine may be subject to software updates: With the SiteConnect module your CASE Dealer will be able to do software updates on your machine remotely
+ Increase uptime, reduce costs!

Lower your Total Cost of Ownership

+ Thanks to the data collected about your machine condition and performance by Siteconnect, your CASE dealer can provide a quick and effective service, when you need it. This gives you increased Uptime.

Download the SiteManager app to enable remote access to your equipment directly from Dealer facilities, always under your permission.
A sticker with a SiteConnect QR code is placed on the rear window.
Scan the QR code with your mobile device to quickly access the SiteConnect page, where you can easily download the SiteManager App and get more useful contents.

STANDARD AND OPTIONS

STANDARD EQUIPMENT

ENGINE
+ FPT NEF 4-cylinder turbo-charged diesel
+ Stage V
+ Selective Catalytic Reduction on Filter (SCRoF)
+ Diesel Oxidation Catalyst (DOC)
+ EGR-free
+ VGT turbocharger
+ Electronic fuel injection
+ High pressure common rail system
+ Neutral safety start
+ Auto engine warm up, emergency stop
+ Glow-plug pre-heat
+ EPF (Engine Protection Feature)
+ Dual-stage fuel filtration
+ Dual element air filter
+ Remote oil filter
+ Green plug oil drain
+ 1,000 hour engine oil and fuel filters change interval
+ 24V system
+ Battery disconnect switch
+ High ambient temperature cooling package
+ External fuel and AdBlue gauges
+ Fuel cooler
+ Fuel filter + fuel prefilter with water accumulation indicator
+ Fuel shut-off valve
+ Idle start
+ Radiator, oil cooler, intercooler – protective screen
+ Refueling pump

FUEL ECONOMY SYSTEMS
+ Eco mode
+ Auto idle
+ One-touch idle
+ Idle shutdown
+ Pump Torque Control (PTC)
+ Boom Economy Control (BEC)
+ Swing Relief Control (SRF)
+ Spool Stroke Control (SSC)
+ Boom Oil Regeneration (BOR)

HYDRAULICS
+ Hydraulic flow control balance
+ Electronically controlled hydraulic pumps
+ Auto power boost
+ Multifunction (hammer/high flow) circuit with electrical proportional control (n.a. on CX130E Long Reach)
+ Auto travel speed change
+ 4 selectable work modes
+ Overload warning device
+ ISO pattern controls
+ Pre-set auxiliary pump settings
+ Switch controlled auxiliary selection
+ Auxiliary valve
+ Hydraulic filter restriction indicator
+ Oil cooler
+ 5,000 hour hydraulic oil change interval
+ 2,000 hour hydraulic filter change interval
+ Hydraulic quick coupler provision
+ Hydraulic fluid supply port with air breather

UPPERSTRUCTURE
+ ISO mirrors
+ Handrail – RH access
+ ISO guard rails
+ Isolation mounted cab (fluid and spring)
+ Lifting eyes for counterweight
+ Lockable fuel cap, service doors and toolbox
+ Rear and side view safety camera

OPERATOR STATION
+ ROPS protection
+ FOPS guard OPG level 2
+ Pressurized cab
+ Tempered safety glass
+ One-touch lock front window
+ Sun visor & rain deflector
+ A/C, heating and defrosting with automatic control
+ Luch box & cool box, cup holders & ashtray
+ Interior dome light
+ Multi-adjustable low frequency air suspension console and tiltable heated seat with air springs and double acting hydraulic damper
+ Sliding seat – 90 mm
+ Seat belt with fasten detection
+ Adjustable armrests
+ Low-effort joystick controls
+ Sliding cockpit - 80 mm
+ Auxiliary select system
+ Aux-in port for personal electronics
+ Multifunction LED color monitor (10”), with silicon switches
+ 22 selectable languages for monitor
+ Anti-theft system (start code system)
+ Split type floor mat
+ 12V electric socket
+ 24V cigarette lighter
+ One-piece right hand window
+ 8 LED work lights (2 cab roof, 1 LH boom, 1 toolbox, 4 all-around)
+ Windshield wiper / washer
+ Clear (Lexan) roof window with sunshade
+ Storage compartments
+ On-board diagnostic system
+ Travel alarm
+ DAB+ Bluetooth radio with antenna and 2 speakers

ATTACHMENTS
+ Standard boom 4.63 m (CX130E) or 5.15 m (CX160E / CX180E)
+ Long reach boom 7.4 m (CX130E Long Reach)
+ Arm 2.50 m (CX130E) or 2.62 m (CX160E / CX180E)
+ Long reach arm 5.3 m (CX130E Long Reach)
+ Attachment types and names storable in the display

UNDERCARRIAGE
+ 600 mm steel triple grouser shoes
+ 700 mm steel triple grouser shoes (only on CX130E Long Reach)
+ Full overlap turntable bearing tub
+ Sealed link chain
+ Lashing points

TELEMATICS
+ SiteConnect module and 3 years advanced SiteWatch subscription with remote monitoring

OPTIONAL EQUIPMENT

HYDRAULICS
+ Clamshell circuit
+ Low-flow circuit, proportional control
+ Double acting circuit with electrical proportional control (only on CX130E Long Reach)

+ OPERATOR STATION
+ Front cab guard - vertical bars (OPG level 2)
+ Front cab guard - vertical bars (OPG level 1)
+ Front mesh screen, available as DIA kit
+ Rain deflector
+ CASE Maximum View Monitor - 270° view with additional left side camera

UPPERSTRUCTURE
+ Hydraulic and engine oil sampling ports

ATTACHMENTS
+ HD boom 4.63 m (CX130E)
+ Arm HD 2.10 / 3.01 m (CX130E) or 3.05 m (CX160E / CX180E)

UNDERCARRIAGE
+ 500 / 700 mm steel triple grouser shoes (CX130E / CX160E) or 700 / 800 mm steel triple grouser shoes (CX180E)
+ 500 mm rubber link chain (CX130E)
+ Triple track (CX160E / CX180E) or double track guide (CX130E)

CASE
CX130E

SPECIFICATIONS
CX130E

ENGINE
Model ____ FPT NEF4
Type ___ Water-cooled, 4-cycle diesel, 4-cylinder in line, High pressure common rail system (electric control), turbocharger with air cooled intercooler, SCRoF, EGR free.
Emissions ____ Stage V
Number of cylinders / Displacement (l) ____ 4 / 4.5
Bore and stroke (mm) ____ 104 x 132
Rated flywheel horse power
ISO 9249 (kW) ____ 76.4 at 2000 min^{-1} (rpm)
ISO 14396 (kW) ____ 78.8 at 2000 min^{-1} (rpm)
Maximum torque
ISO 9249 (Nm) ____ 370 at 1800 min^{-1} (rpm)
ISO 14396 (Nm) ____ 379 at 1800 min^{-1} (rpm)

HYDRAULIC SYSTEM
Main pumps ____ 2 variable displacement axial piston pumps with regulating system
Max. oil flow (l/min) ____ 2 × 129 at 2000 min^{-1}
Working circuit pressure
Boom/Arm/Bucket (MPa) ___ 34.3 - 36.3 with auto power boost
Swing circuit (MPa) ____ 27.9
Swing circuit (LR) (MPa) ____ 24.0
Travel circuit (MPa) ____ 34.3
Pilot pump ____ 1 gear pump
Max. oil flow (l/min) ____ 20
Working circuit pressure (MPa) ____ 3.9
Blade pump (CX130E Blade) ____ 1 gear pump
Max. oil flow (l/min) ____ 54 at 2000 min^{-1}
Working circuit pressure (MPa) ____ 20.6
Boom cylinders
Bore (mm) ____ 105
Stroke (mm) ____ 961
Arm cylinder
Bore (mm) ____ 115
Stroke (mm) ____ 1108
Bucket cylinder
Bore (mm) ____ 95
Stroke (mm) ____ 881
Bore (LR) (mm) ____ 85
Stroke (LR) (mm) ____ 665

SWING
Swing motor ____ Fixed displacement axial piston motor
Maximum swing speed (min^{-1}) ____ 14.3
Maximum swing speed (LR) (min^{-1}) ____ 6.9
Swing torque (kNm) ____ 33
Swing torque (LR) (kNm) ____ 28.2

FILTERS
Suction filter (µm) ____ 105
Return filter (µm) ____ 6
Pilot line filter (µm) ____ 8

ELECTRICAL SYSTEM
Voltage (V) ____ 24
Alternator (Amp) ____ 90
Starter (V - kW) ____ 24 - 4.0
Battery ____ 2 X 12 V 72 Ah/5HR

UNDERCARRIAGE
Travel motor ____ Variable displacement axial piston motor
High travel speed (Automatic travel speed shifting) (km/h) ____ 5.7
Low travel speed (km/h) ____ 3.4
Drawbar pull (Blade & LR / LC) (kN) ____ 116 / 117
Number of carrier rollers (each side) (Blade/LC) ____ 1 / 2
Number of track rollers (each side) ____ 7
Number of shoes (each side) (Blade/LC) ____ 43 / 46
Type of shoes ____ Triple grouser shoes
Gradeability ____ 70% (35°)

NOISE
External guaranteed sound level
(EU Directive 2000/14/EC) ____ LwA 98 dB(A)
Operator cab sound pressure level (ISO 6396) ____ LpA 69 dB(A)

CIRCUIT AND COMPONENT CAPACITIES
Fuel tank (l) ____ 250
Hydraulic system (l) ____ 157
Hydraulic tank (l) ____ 82
AdBlue tank (l) ____ 60

PERFORMANCE DATA		Arm 2.50 m	Arm 3.01 m	Arm 2.11 m
Boom length	mm	4630	4630	4630
Bucket radius	mm	1200	1200	1200
Bucket wrist action	°	178	178	178
A Maximum reach at GRP	mm	8170	8640	7810
B Maximum reach	mm	8310	8770	7960
C Max. digging depth	mm	5550	6050	5160
D Max. digging height	mm	8770	9050	8550
E Max. dumping height	mm	6390	6680	6170
F Min. swing radius	mm	2340	2660	2360

DIGGING FORCE (ISO 6015)		Arm 2.50 m	Arm 3.01 m	Arm 2.11 m
Arm digging force	kN	62	56	70
with Auto power up	kN	66	60	74
Bucket digging force	kN	90	90	90
with Auto power up	kN	95	95	95

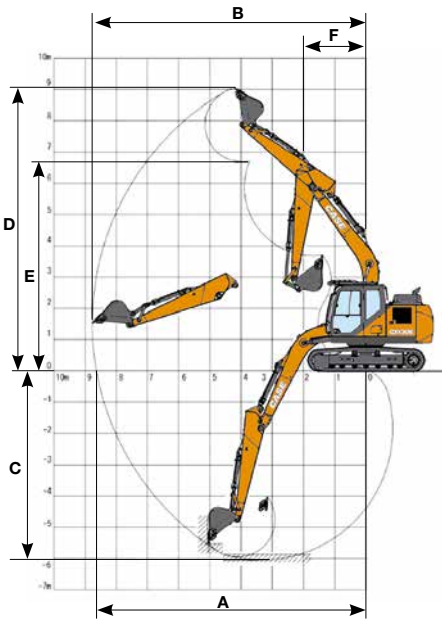

SPECIFICATIONS
CX130E BLADE-LC

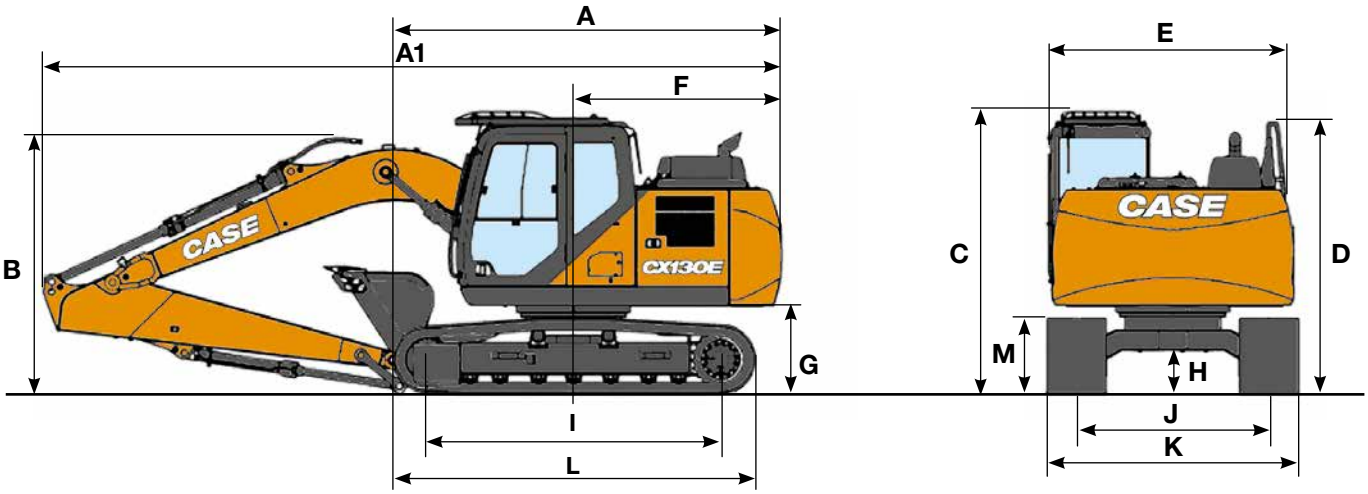

GENERAL DIMENSIONS		Arm 2.50 m	Arm 3.01 m	Arm 2.11 m
A Overall length (without attachment) (Blade/LC)	mm	4170 / 4050	4170 / 4050	4170 / 4050
A1 Overall length (with attachment) (Blade/LC)	mm	7910 / 7660	7930 / 7680	7900 / 7660
B Overall height (to top of boom)	mm	2760	2740	2670
C Cab height	mm	2910	2910	2910
D Overall height (to top of handrail)	mm	2800	2800	2800
E Upper structure overall width	mm	2490	2490	2490
F Swing (rear end radius)	mm	2190	2190	2190
G Clearance height under upper structure	mm	900	900	900
H Minimum ground clearance (Blade/LC)	mm	425 / 420	425 / 420	425 / 420
I Wheel base (center to center of wheels) (Blade/LC)	mm	2790 / 3040	2790 / 3040	2790 / 3040
J Track gauge	mm	1990	1990	1990
K Undercarriage overall width (with 600 mm shoes)	mm	2590	2590	2590
L Crawler overall length (Blade/LC)	mm	3500 / 3760	3500 / 3760	3500 / 3760
M Crawler tracks height	mm	780	780	780

WEIGHT AND GROUND PRESSURE

With 2.50 m arm, 0.5 m³ bucket, 600 mm grouser shoes, operator, lubricant, coolant, full fuel tank and FOPS protection level 2.

	WEIGHT	GROUND PRESSURE
Blade	13900 kg	0.037 MPa
LC	13300 kg	0.033 MPa

Counterweight: 1870 kg

With 5.30 m arm, 0.28 m³ bucket, 700 mm grouser shoes, operator, lubricant, coolant, full fuel tank and FOPS protection level 2.

	WEIGHT	GROUND PRESSURE
LR	15100 kg	0.033 MPa

Counterweight: 3350 kg

HAMMER
CX130E

Direct Fit

Model	Install Weight kg	Reference machine settings		Arm 2.11 m	Arm 2.50 m	Arm 3.01 m
		Flow l/min	Relief Pressure Mpa			
CB BREAKER						
CB135S	630	87	18-21	□	□	□
CB150S	950	87	19-21	□	—	—

□ Applicable
— Not applicable

SPECIFICATIONS
CX130E LONG REACH

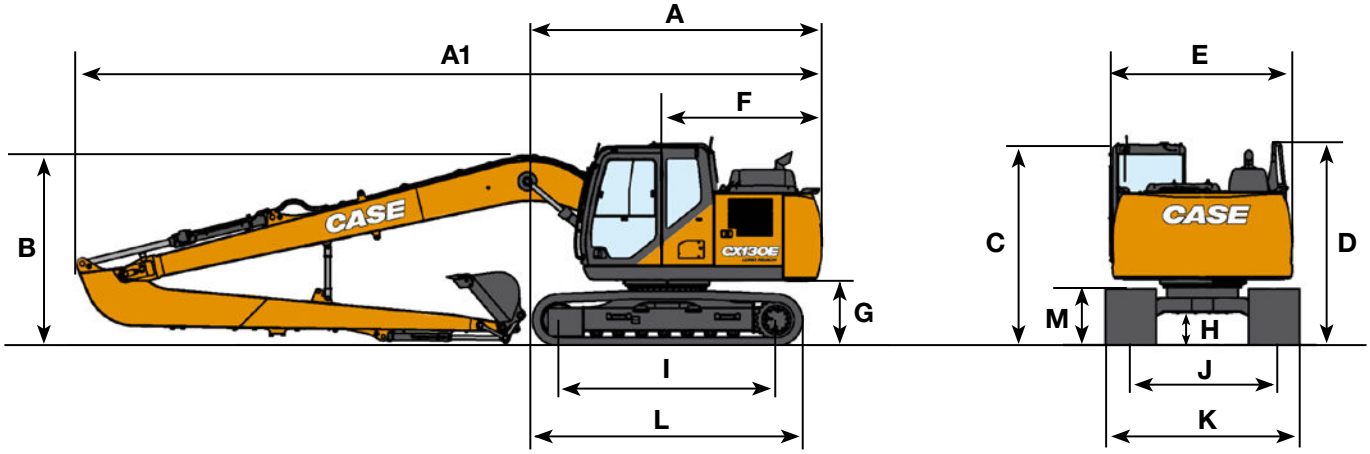

GENERAL DIMENSIONS			Arm 5.30 m
A	Overall length (without attachment)	mm	4050
A1	Overall length (with attachment)	mm	10430
B	Overall height (to top of boom)	mm	2730
C	Cab height	mm	2920
D	Overall height (to top of handrail)	mm	2810
E	Upper structure overall width	mm	2490
F	Swing (rear end radius)	mm	2190
G	Clearance height under upper structure	mm	900
H	Minimum ground clearance	mm	420
I	Wheel base (center to center of wheels)	mm	3040
L	Crawler overall length	mm	3760
M	Crawler tracks height	mm	785
J	Track gauge	mm	1990
K	Undercarriage overall width (with 700 mm shoes)	mm	2690

PERFORMANCE DATA			Arm 5.30 m
	Boom length	mm	7400
	Bucket radius	mm	1050
	Bucket wrist action		180°
A	Maximum reach at GRP	mm	13010
B	Maximum reach	mm	13100
C	Max. digging depth	mm	10130
D	Max. digging height	mm	12070
E	Max. dumping height	mm	10090
F	Min. swing radius	mm	3240

DIGGING FORCE (ISO 6015)	Arm 5.30 m
Arm digging force	23 kN
Bucket digging force	35 kN

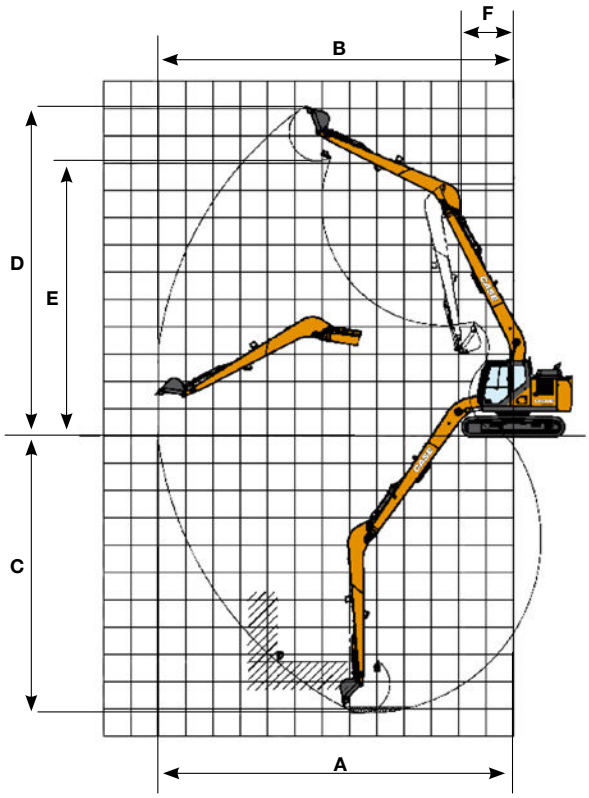

LIFTING CAPACITY
CX130E BLADE-LC

	REACH								
Front / Side	2.0 m		4.0 m		6.0 m		At max reach		m
BLADE DOWN - Short arm 2.11 m, 600 mm shoes, max reach 6.76 m									
6.0 m			3600*	3600*			2730*	2730*	5.00
4.0 m			4270*	4270*	3800*	2510	2440*	2330	6.27
2.0 m			5970*	4330	4190*	2410	2490*	2020	6.74
0 m			6990*	4050	4540*	2310	2840*	2040	6.58
-2.0 m	7910*	7910*	6620*	4030			3840*	2460	5.74
BLADE DOWN - Standard arm 2.50 m, 600 mm shoes, max reach 7.11 m									
6.0 m							2200*	2200*	5.47
4.0 m			3870*	3870*	3550*	2570	2010*	2010*	6.65
2.0 m			5650*	4430	4050*	2450	2060*	1900	7.09
0 m			6920*	4110	4510*	2340	2340*	1910	6.94
-2.0 m	7160*	7160*	6840*	4040	4300*	2320	3080*	2250	6.15
-4.0 m			4810*	4210			4130*	3710	4.39
BLADE DOWN - Long arm 3.01 m, 600 mm shoes, max reach 7.57 m									
6.0 m					2170*	2170*	2000*	2000*	6.06
4.0 m					3170*	2580	1850*	1850*	7.14
2.0 m			5070*	4470	3750*	2440	1910*	1700	7.55
0 m			6620*	4080	4340*	2300	2140*	1700	7.41
-2.0 m	6350*	6350*	6890*	3950	4410*	2240	2730*	1950	6.68
-4.0 m	10230*	10230*	5580*	4050			3970*	2890	5.11
BLADE UP - Short arm 2.11 m, 600 mm shoes, max reach 6.76 m									
6.0 m			3600*	3600*			2730*	2730*	5.00
4.0 m			4270*	4270*	3080	2360	2440*	2190	6.27
2.0 m			5520	4030	2970	2260	2490	1890	6.74
0 m			5210	3770	2870	2160	2520	1910	6.58
-2.0 m	7910*	7910*	5190	3740			3060	2300	5.74
BLADE UP - Standard arm 2.50 m, 600 mm shoes, max reach 7.11 m									
6.0 m							2200*	2200*	5.47
4.0 m			3870*	3870*	3140	2420	2010*	2010*	6.65
2.0 m			5620	4130	3010	2300	2060*	1780	7.09
0 m			5270	3820	2890	2190	2340*	1790	6.94
-2.0 m	7160*	7160*	5200	3760	2870	2170	2780	2100	6.15
-4.0 m			4810*	3910			4130*	3460	4.39
BLADE UP - Long arm 3.01 m, 600 mm shoes, max reach 7.57 m									
6.0 m					2170*	2170*	2000*	2000*	6.06
4.0 m					3160	2430	1850*	1800	7.14
2.0 m			5070*	4170	3000	2290	1910*	1590	7.55
0 m			5240	3790	2850	2150	2100	1590	7.41
-2.0 m	6350*	6350*	5100	3660	2790	2090	2410	1820	6.68
-4.0 m	10230*	10230*	5210	3760			3620	2700	5.11

* The above loads (kg) are compliant to the ISO standards and refer to the excavator equipped without bucket. The indicated loads are no more than 87% of hydraulic system lift capacity or 75% of static tipping load. Values marked with an asterisk (*) are limited by the hydraulic lifting capacity.

LIFTING CAPACITY
CX130E BLADE-LC

REACH	2.0 m		4.0 m		6.0 m		At max reach		
Front / Side									m
LC UNDERCARRIAGE - Short arm 2.11 m, 600 mm shoes, max reach 6.76 m									
6.0 m			3600*	3600*			2730*	2730*	5.00
4.0 m			4270*	4270*	3440	2260	2440*	2090	6.27
2.0 m			5970*	3860	3330	2160	2490*	1810	6.74
0 m			5980	3600	3220	2060	2820	1820	6.58
-2.0 m	7910*	7910*	5950	3570			3440	2200	5.74
LC UNDERCARRIAGE - Standard arm 2.50 m, 600 mm shoes, max reach 7.11 m									
6.0 m							2200*	2200*	5.47
4.0 m			3870*	3870*	3500	2320	2010*	1950	6.65
2.0 m			5650*	3960	3370	2200	2060*	1700	7.09
0 m			6040	3650	3250	2090	2340*	1710	6.94
-2.0 m	7160*	7160*	5960	3590	3220	2070	3080*	2000	6.15
-4.0 m			4810*	3750			4130*	3310	4.39
LC UNDERCARRIAGE - Long arm 3.01 m, 600 mm shoes, max reach 7.57 m									
6.0 m					2170*	2170*	2000*	2000*	6.06
4.0 m					3170*	2330	1850*	1720	7.14
2.0 m			5070*	4010	3360	2190	1910*	1520	7.55
0 m			6010	3620	3210	2040	2140*	1510	7.41
-2.0 m	6350*	6350*	5860	3490	3150	1990	2710	1730	6.68
-4.0 m	10230*	10230*	5580*	3590			3970*	2570	5.11

LIFTING CAPACITY
CX130E LONG REACH

REACH	2.0 m		4.0 m		6.0 m		8.0 m		10.0 m		12.0 m		At max reach		
Front / Side															m
Long Reach arm 5.30 m, 700 mm shoes, max reach 12.04 m															
10.0 m							1040*	1040*					720*	720*	8.49
8.0 m							1400*	1400*	770*	770*			660*	660*	10.12
6.0 m							1530*	1530*	1440*	1400			650*	650*	11.17
4.0 m					2050*	2050*	1800*	1800*	1650*	1340			660*	660*	11.79
2.0 m			4300*	4300*	2760*	2700	2150*	1780	1840*	1250	760*	760*	710*	710*	12.04
0 m			2770*	2770*	3390*	2370	2480*	1610	1820	1160			790*	790*	11.95
-1.5 m	1420*	1420*	2700*	2700*	3540	2190	2380	1500	1750	1090			940*	890	11.52
-4.0 m	2060*	2060*	3280*	3280*	3470	2130	2330	1450	1730	1070			1190*	980	10.69
-6.0 m	2780*	2780*	4240*	3860	3510	2160	2350	1470					1750*	1210	9.37
-8.0 m			4140*	4100	2860*	2300							2240*	1790	7.29

* The above loads (kg) are compliant to the ISO standards and refer to the excavator equipped without bucket. The indicated loads are no more than 87% of hydraulic system lift capacity or 75% of static tipping load. Values marked with an asterisk (*) are limited by the hydraulic lifting capacity.

BUCKETS
CX130E

CX130E - Direct Mount

Capacity m³ (ISO7451 HEAPED)	Width mm	Weight kg	Arm 2.11 m	Arm 2.50 m	Arm 3.01 m
GENERAL PURPOSE BUCKETS					
0.21	450	250	○	○	○
0.31	600	290	○	○	○
0.41	750	330	○	○	○
0.52	900	360	○	○	○
0.58	1000	400	○	○	●
0.66	1100	430	●	●	▲
0.73	1200	450	●	▲	■
HEAVY DUTY BUCKETS					
0.21	450	350	○	○	○
0.31	600	400	○	○	○
0.42	750	460	○	○	○
0.45	800	470	○	○	○
0.52	900	510	○	○	●
0.60	1000	550	○	●	▲
0.67	1100	580	●	▲	■
0.74	1200	620	▲	■	—
GRADING BUCKETS					
0.59	1500	440*	○	●	●
0.72	1800	510*	●	▲	■
0.80	2000	550*	▲	■	—
DITCH CLEANING BUCKETS					
0.54	1830	480*	○	○	●
90° TILT DITCH CLEANING BUCKETS**					
0.46	1500	640*	○	●	▲
0.55	1800	690*	●	▲	■
0.61	2000	730*	▲	■	—

CX130E - Quick coupled

Capacity m³ (ISO7451 HEAPED)	Width mm	Weight kg	Arm 2.11 m	Arm 2.50 m	Arm 3.01 m
GENERAL PURPOSE BUCKETS					
0.21	450	250	○	○	○
0.31	600	290	○	○	○
0.41	750	330	○	○	○
0.52	900	360	○	○	●
0.58	1000	400	●	●	▲
0.66	1100	430	●	▲	■
0.73	1200	450	▲	■	—
HEAVY DUTY BUCKETS					
0.21	450	350	○	○	○
0.31	600	400	○	○	○
0.42	750	460	○	○	●
0.45	800	470	○	○	●
0.52	900	510	○	●	▲
0.60	1000	550	●	▲	■
0.67	1100	580	▲	■	—
0.74	1200	620	■	—	—
GRADING BUCKETS					
0.59	1500	440*	●	●	■
0.72	1800	510*	▲	■	—
0.80	2000	550*	■	—	—
DITCH CLEANING BUCKETS					
0.54	1830	480*	●	●	▲

* with bolt-on cutting edge
**Tilt angle 45° L/R Connect to Low-Flow Auxiliary Hydraulic Circuit

BUCKETS
CX130E LONG REACH

CX130E LR - Direct Mount

Capacity m³ (ISO7451 HEAPED)	Width mm	Weight kg	Arm 5.30 m
GENERAL PURPOSE BUCKETS			
0.10	300	125	○
0.12	350	130	○
0.15	400	140	○
0.17	450	145	○
0.19	500	150	○
0.24	600	170	●
0.32	750	200	■
DITCH CLEANING BUCKETS			
0.27	1200	170*	●
0.35	1500	200*	■
GRADING BUCKET			
0.35	1500	270*	■

○ Rated material density up to 2 ton/m³
● Rated material density up to 1.6 ton/m³
▲ Rated material density up to 1.4 ton/m³

CX130E LR - Quick coupled

Capacity m³ (ISO7451 HEAPED)	Width mm	Weight kg	Arm 5.30 m
GENERAL PURPOSE BUCKETS			
0.10	300	125	○
0.12	350	130	○
0.15	400	140	○
0.17	450	145	○
0.19	500	150	●
0.24	600	170	■
DITCH CLEANING BUCKET			
0.27	1200	170*	■

* with bolt-on cutting edge

■ Rated material density up to 1.2 ton/m³
— Not applicable

SPECIFICATIONS
CX160E

ENGINE

Model	FPT NEF4
Type	Water-cooled, 4-cycle diesel, 4-cylinder in line, High pressure common rail system (electric control), turbocharger with air cooled intercooler, SCRoF, EGR free.
Emissions	Stage V
Number of cylinders / Displacement (l)	4 / 4.5
Bore and stroke (mm)	104 x 132
Rated flywheel horse power	
ISO 9249 (kW)	90.4 at 2200 min^{-1} (rpm)
ISO 14396 (kW)	96.5 at 2200 min^{-1} (rpm)
Maximum torque	
ISO 9249 (Nm)	456 at 1600 min^{-1} (rpm)
ISO 14396 (Nm)	470 at 1600 min^{-1} (rpm)

HYDRAULIC SYSTEM

Main pumps	2 variable displacement axial piston pumps with regulating system
Max. oil flow (l/min)	2 × 159 at 2200 min^{-1}
Working circuit pressure	
Boom/Arm/Bucket (MPa)	34.3 - 36.3 with auto power boost
Swing circuit (MPa)	27.9
Travel circuit (MPa)	34.3
Pilot pump	1 gear pump
Max. oil flow (l/min)	22
Working circuit pressure (MPa)	3.9
Boom cylinders	
Bore (mm)	115
Stroke (mm)	1179
Arm cylinder	
Bore (mm)	125
Stroke (mm)	1280
Bucket cylinder	
Bore (mm)	105
Stroke (mm)	985

SWING

Swing motor	Fixed displacement axial piston motor
Maximum swing speed (min^{-1})	8.5
Swing torque (kNm)	45.1

FILTERS

Suction filter (µm)	105
Return filter (µm)	6
Pilot line filter (µm)	8

ELECTRICAL SYSTEM

Voltage (V)	24
Alternator (Amp)	50
Starter (V - kW)	24 - 4.0
Battery	2 X 12 V - 72 Ah/5HR

UNDERCARRIAGE

Travel motor	Variable displacement axial piston motor
Travel speeds	
High travel speed (Automatic travel speed shifting) (km/h)	5.2
Low travel speed (km/h)	3.0
Drawbar pull (kN)	161
Number of carrier rollers (each side)	2
Number of track rollers (each side)	7
Number of shoes (each side)	44
Type of shoes	Triple grouser shoes
Gradeability	70% (35°)

NOISE

External guaranteed sound level (EU Directive 2000/14/EC) (dB(A))	LwA 101
Operator cab sound pressure level (ISO 6396) (dB(A))	LpA 69

CIRCUIT AND COMPONENT CAPACITIES

Fuel tank (l)	300
Hydraulic system (l)	170
Hydraulic tank (l)	82
AdBlue tank (l)	60

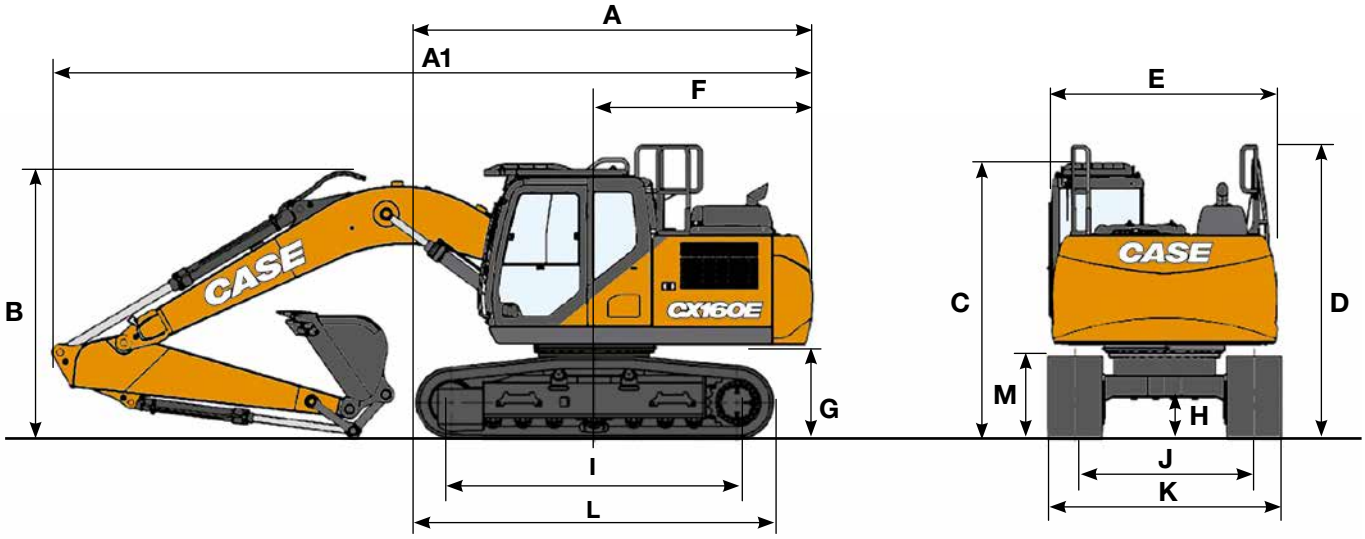

GENERAL DIMENSIONS		Arm 2.62 m	Arm 3.05 m
A Overall length (without attachment)	mm	4480	4480
A1 Overall length (with attachment)	mm	8520	8570
B Overall height (to top of boom)	mm	2960	3130
C Cab height	mm	3050	3050
D Overall height (to top of handrail)	mm	3140	3140
E Upper structure overall width	mm	2520	2520
F Swing (rear end radius)	mm	2520	2520
G Clearance height under upper structure	mm	1030	1030
H Minimum ground clearance	mm	420	420
I Wheel base (Center to center of wheels)	mm	3190	3190
J Track gauge	mm	1990	1990
K Undercarriage overall width (with 600 mm shoes)	mm	2590	2590
L Crawler overall length	mm	3990	3990
M Crawler tracks height	mm	920	920

WEIGHT AND GROUND PRESSURE

With 2.62 m arm, 0.62 m³ bucket , 600 mm grouser shoes, operator, lubricant, coolant, full fuel tank and FOPS protection level 2.

	WEIGHT	GROUND PRESSURE
LC	17300 kg	0.041 MPa

Counterweight: 2820 kg

PERFORMANCE DATA		Arm 2.62 m	Arm 3.05 m
Boom length	mm	5150	5150
Bucket radius	mm	1350	1350
Bucket wrist action	°	178	178
A Maximum reach at GRP	mm	8870	9220
B Maximum reach	mm	9040	9380
C Max. digging depth	mm	6060	6490
D Max. digging height	mm	9240	9290
E Max. dumping height	mm	6610	6690
F Min. swing radius	mm	2990	3050

DIGGING FORCE (ISO 6015)		Arm 2.62 m	Arm 3.05 m
Arm digging force	kN	79	72
with Auto power up	kN	84	77
Bucket digging force	kN	112	112
with Auto power up	kN	118	118

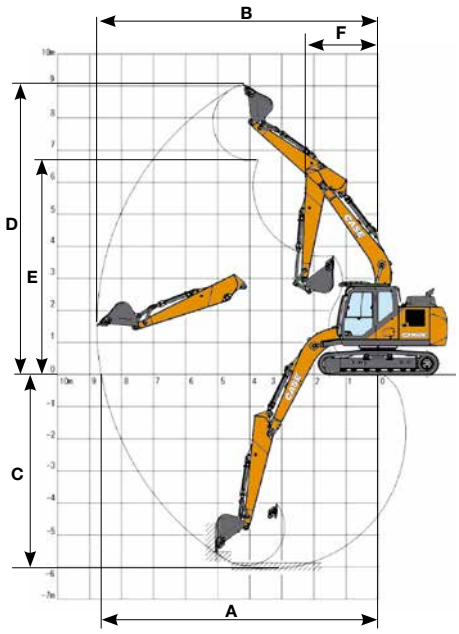

LIFTING CAPACITY
CX160E

REACH	2.0 m		4.0 m		6.0 m		At max reach		
Front / Side									m
Standard arm 2.62 m, 600 mm shoes, max reach 7.69 m									
6.0 m					3920*	3390	2660*	2660*	6.37
4.0 m			6090*	6090*	5080	3290	2540*	2360	7.34
2.0 m			8890*	5410	4830	3070	2650*	2120	7.69
0 m			8660	5010	4630	2880	3010*	2130	7.49
-2.0 m	8100*	8100*	8570	4940	4570	2830	3920*	2470	6.70
-4.0 m	13670*	13670*	8060*	5120			5960*	3730	5.05

REACH	2.0 m		4.0 m		6.0 m		8.0 m		At max reach		
Front / Side											m
Long arm 3.05 m, 600 mm shoes, max reach 8.03 m											
8.0 m									2820*	2820*	4.94
6.0 m					3850*	3440			2380*	2380*	6.78
4.0 m					4690*	3310			2310*	2180	7.70
2.0 m			8240*	5410	4840	3070	2570*	1970	2440*	1960	8.03
0 m			8650	4940	4610	2860			2790*	1960	7.84
-2.0 m	7650*	7650*	8490	4830	4510	2770			3570	2230	7.09
-4.0 m	14120*	14120*	8640	4960					5160	3180	5.56

* The above loads (kg) are compliant to the ISO standards and refer to the excavator equipped without bucket. The indicated loads are no more than 87% of hydraulic system lift capacity or 75% of static tipping load. Values marked with an asterisk (*) are limited by the hydraulic lifting capacity.

HAMMER
CX160E

Direct Fit

Model	Install Weight kg	Reference machine settings		Arm 2.62 m	Arm 3.05 m
		Flow l/min	Relief Pressure Mpa		
CB BREAKER					
CB150S	970	95	19-21	□	—
CB240S	1100	95	19-21	—	—

□ Applicable
— Not applicable

BUCKETS
CX160E

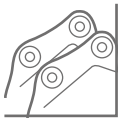

CX160E - Direct Mount

Capacity m³ (ISO7451 HEAPED)	Width mm	Weight kg	Arm 2.62 m	Arm 3.05 m
GENERAL PURPOSE BUCKETS				
0.24	450	350	○	○
0.36	600	390	○	○
0.50	750	440	○	○
0.62	900	480	○	○
0.70	1000	500	○	●
0.78	1100	540	●	▲
0.87	1200	570	▲	■
1.00	1350	630	■	—
HEAVY DUTY BUCKETS				
0.26	450	420	○	○
0.38	600	480	○	○
0.51	750	550	○	○
0.65	900	620	○	●
0.70	1000	660	○	●
0.75	1050	680	●	●
0.78	1100	700	●	▲
0.91	1200	740	▲	■
1.00	1300	800	■	—
GRADING BUCKETS				
0.59	1500	440*	○	○
0.72	1800	510*	○	●
0.85	2100	570*	●	▲
DITCH CLEANING BUCKETS				
0.86	1830	630*	●	▲
90° TILT DITCH CLEANING BUCKETS**				
0.46	1500	650*	○	○
0.55	1800	700*	○	●
0.61	2000	740*	●	▲
0.68	2200	810*	▲	■
0.74	2400	840*	■	—

CX160E - Quick coupled

Capacity m³ (ISO7451 HEAPED)	Width mm	Weight kg	Arm 2.62 m	Arm 3.05 m
GENERAL PURPOSE BUCKETS				
0.24	450	350	○	○
0.36	600	390	○	○
0.50	750	440	○	○
0.62	900	480	○	●
0.70	1000	500	●	▲
0.78	1100	540	▲	■
0.87	1200	570	■	—
HEAVY DUTY BUCKETS				
0.26	450	420	○	○
0.38	600	480	○	○
0.51	750	550	○	●
0.65	900	620	●	▲
0.70	1000	660	▲	■
0.75	1050	680	■	■
0.78	1100	700	■	—
GRADING BUCKETS				
0.59	1500	440*	○	●
0.72	1800	510*	●	■
0.80	2100	570*	■	—
DITCH CLEANING BUCKETS				
0.86	1830	630*	■	—

* with bolt-on cutting edge
**Tilt angle 45° L/R Connect to Low-Flow Auxiliary Hydraulic Circuit

○ Rated material density up to 2 ton/m³
● Rated material density up to 1.6 ton/m³
▲ Rated material density up to 1.4 ton/m³
■ Rated material density up to 1.2 ton/m³
— Not applicable

SPECIFICATIONS
CX180E

ENGINE

Model _____ FPT NEF4
Type _____ Water-cooled, 4-cycle diesel, 4-cylinder in line, High pressure common rail system (electric control), turbocharger with air cooled intercooler, SCRoF, EGR free.
Emissions _____ Stage V
Number of cylinders / Displacement (l) _____ 4 / 4.5
Bore and stroke (mm) _____ 104 x 132

Rated flywheel horse power
ISO 9249 (kW) _____ 90.4 at 2200 min^{-1} (rpm)
ISO 14396 (kW) _____ 96.5 at 2200 min^{-1} (rpm)

Maximum torque
ISO 9249 (Nm) _____ 456 at 1600 min^{-1} (rpm)
ISO 14396 (Nm) _____ 470 at 1600 min^{-1} (rpm)

HYDRAULIC SYSTEM

Main pumps ___ 2 variable displacement axial piston pumps with regulating system
Max. oil flow (l/min) _____ 2 × 159 at 2200 min^{-1}

Working circuit pressure
Boom/Arm/Bucket (MPa) _____ 34.3 - 36.3 with auto power boost
Swing circuit (MPa) _____ 27.9
Travel circuit (MPa) _____ 34.3
Pilot pump _____ 1 gear pump
Max. oil flow (l/min) _____ 22
Working circuit pressure (MPa) _____ 3.9

Boom cylinders
Bore (mm) _____ 115
Stroke (mm) _____ 1179

Arm cylinder
Bore (mm) _____ 125
Stroke (mm) _____ 1280

Bucket cylinder
Bore (mm) _____ 105
Stroke (mm) _____ 985

SWING

Swing motor _____ Fixed displacement axial piston motor
Maximum swing speed (min^{-1}) _____ 8.5
Swing torque (Nm) _____ 45.1

PERFORMANCE DATA		Arm 2.62 m	Arm 3.05 m
Boom length	mm	5150	5150
Bucket radius	mm	1350	1350
Bucket wrist action	°	178	178
A Maximum reach at GRP	mm	8870	9210
B Maximum reach	mm	9040	9380
C Max. digging depth	mm	6040	6470
D Max. digging height	mm	9250	9300
E Max. dumping height	mm	6630	6710
F Min. swing radius	mm	2990	3050

DIGGING FORCE (ISO 6015)		Arm 2.62 m	Arm 3.05 m
Arm digging force	kN	79	72
with Auto power up	kN	84	77
Bucket digging force	kN	112	112
with Auto power up	kN	118	118

FILTERS

Suction filter (µm) _____ 105
Return filter (µm) _____ 6
Pilot line filter (µm) _____ 8

ELECTRICAL SYSTEM

Voltage (V) _____ 24
Alternator (Amp) _____ 50
Starter (V - kW) _____ 24 - 4.0
Battery _____ 2 X 12 V - 72 Ah/5HR

UNDERCARRIAGE

Travel motor _____ Variable displacement axial piston motor

Travel speeds
High travel speed (Automatic travel speed shifting) (km/h) ____ 4.3
Low travel speed (km/h) _____ 2.6
Drawbar pull (kN) _____ 190
Number of carrier rollers (each side) _____ 2
Number of track rollers (each side) _____ 7
Number of shoes (each side) _____ 46
Type of shoes _____ Triple grouser shoes
Gradeability _____ 70% (35°)

NOISE

External guaranteed sound level
(EU Directive 2000/14/EC) _____ LwA 101 dB(A)
Operator cab sound pressure level (ISO 6396) _____ LpA 69 dB(A)

CIRCUIT AND COMPONENT CAPACITIES

Fuel tank (l) _____ 300
Hydraulic system (l) _____ 170
Hydraulic tank (l) _____ 82
AdBlue tank (l) _____ 60

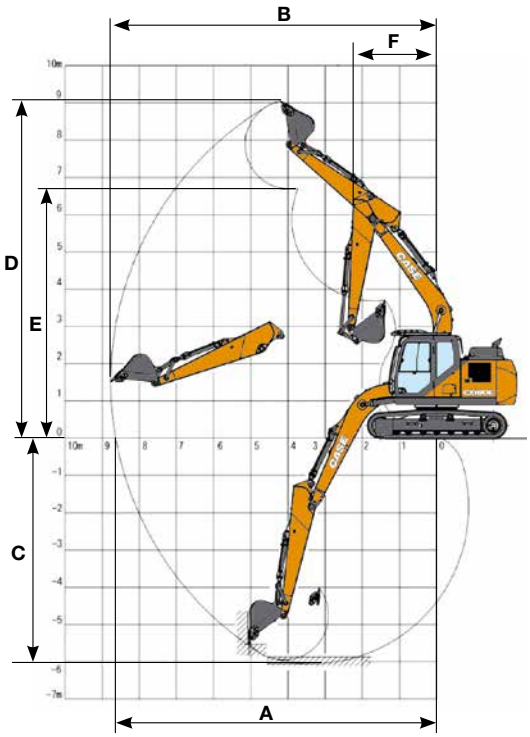

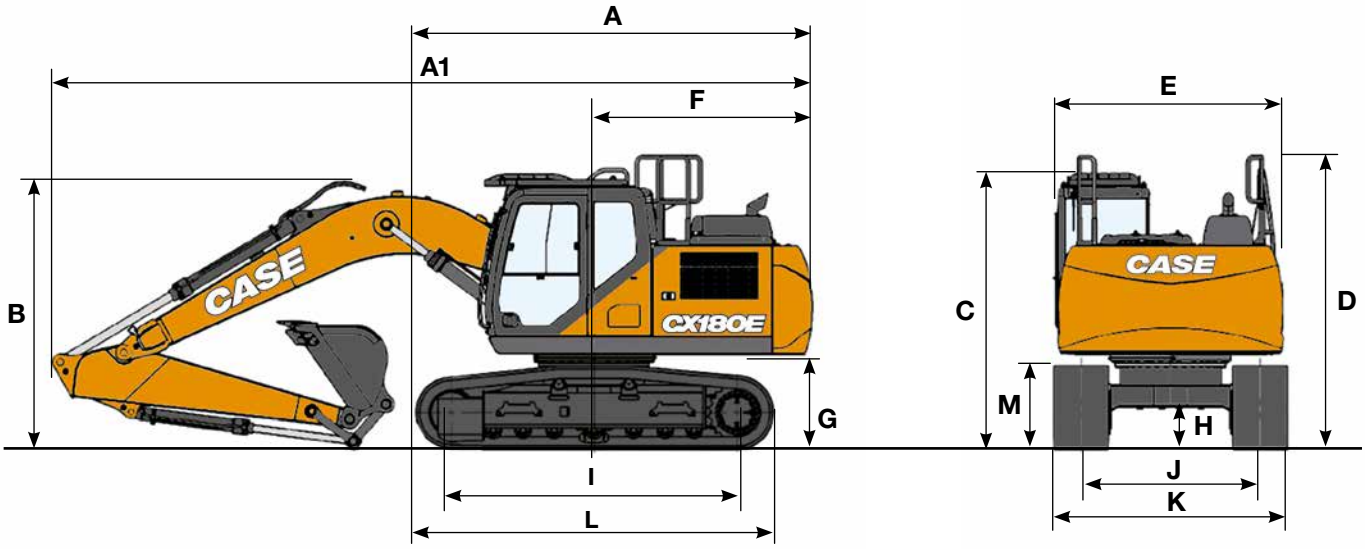

GENERAL DIMENSIONS		Arm 2.62 m	Arm 3.05 m
A Overall length (without attachment)	mm	4580	4580
A1 Overall length (with attachment)	mm	8510	8570
B Overall height (to top of boom)	mm	2960	3130
C Cab height	mm	3070	3070
D Overall height (to top of handrail)	mm	3150	3150
E Upper structure overall width	mm	2520	2520
F Swing (rear end radius)	mm	2520	2520
G Clearance height under upper structure	mm	1040	1040
H Minimum ground clearance	mm	440	440
I Wheel base (center to center of wheels)	mm	3370	3370
J Track gauge	mm	2200	2200
K Undercarriage overall width (with 600 mm shoes)	mm	2800	2800
L Crawler overall length	mm	4180	4180
M Crawler tracks height	mm	920	920

WEIGHT AND GROUND PRESSURE

With 2.62 m arm, 0.68 m^3 bucket , 600 mm grouser shoes, operator, lubricant, coolant, full fuel tank and FOPS protection level 2.

	WEIGHT	GROUND PRESSURE
LC	18400 kg	0.041 MPa

Counterweight: 3120 kg

LIFTING CAPACITY
CX180E

REACH									
Front / Side	2.0 m		4.0 m		6.0 m		At max reach		m
Standard arm 2.62 m, 600 mm shoes, max reach 7.69 m									
6.0 m					3940*	3940*	2660*	2660*	6.38
4.0 m			6110*	6110*	5080*	3930	2530*	2530*	7.35
2.0 m			8910*	6600	5630	3710	2650*	2580	7.69
0 m			10290	6180	5420	3520	3020*	2610	7.48
-2.0 m	8140*	8140*	10210	6110	5360	3470	3940*	3020	6.69
-4.0 m	13620*	13620*	8020*	6300			5960*	4580	5.03

REACH											
Front / Side	2.0 m		4.0 m		6.0 m		8.0 m		At max reach		m
Long arm 3.05 m, 600 mm shoes, max reach 8.03 m											
8.0 m									2820*	2820*	4.96
6.0 m					3860*	3860*			2380*	2380*	6.79
4.0 m					4690*	3960			2310*	2310*	7.70
2.0 m			8260*	6680	5640	3710	2580*	2410	2440*	2400	8.03
0 m			10200*	6170	5400	3500			2790*	2420	7.83
-2.0 m	7690*	7690*	10120	6030	5300	3410			3620*	2750	7.08
-4.0 m	14190*	14190*	8720*	6160					5890*	3910	5.54

* The above loads (kg) are compliant to the ISO standards and refer to the excavator equipped without bucket. The indicated loads are no more than 87% of hydraulic system lift capacity or 75% of static tipping load. Values marked with an asterisk (*) are limited by the hydraulic lifting capacity.

HAMMER
CX180E

Direct Fit

Model	Install Weight kg	Reference machine settings		Arm 2.62 m	Arm 3.05 m
		Flow l/min	Relief Pressure Mpa		
CB BREAKER					
CB240S	1100	95	19-21	□	—

□ Applicable
— Not applicable

BUCKETS
CX180E

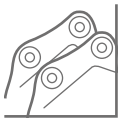

CX180E - Direct Mount

Capacity m³ (ISO7451 HEAPED)	Width mm	Weight kg	Arm 2.62 m	Arm 3.05 m
GENERAL PURPOSE BUCKETS				
0.24	450	350	○	○
0.36	600	390	○	○
0.50	750	440	○	○
0.62	900	480	○	○
0.70	1000	500	○	○
0.78	1100	540	○	●
0.87	1200	570	●	▲
1.00	1350	630	▲	■
HEAVY DUTY BUCKETS				
0.26	450	420	○	○
0.38	600	480	○	○
0.51	750	550	○	○
0.65	900	620	○	○
0.70	1000	660	○	○
0.75	1050	680	○	●
0.78	1100	700	○	●
0.91	1200	740	●	▲
1.00	1300	800	▲	■
GRADING BUCKETS				
0.59	1500	440*	○	○
0.72	1800	510*	○	○
0.85	2100	570*	○	●
DITCH CLEANING BUCKETS				
0.86	1830	630*	○	●
90° TILT DITCH CLEANING BUCKETS**				
0.46	1500	650*	○	○
0.55	1800	700*	○	○
0.61	2000	740*	○	●
0.68	2200	810*	●	■
0.74	2400	840*	■	—

CX180E - Quick coupled

Capacity m³ (ISO7451 HEAPED)	Width mm	Weight kg	Arm 2.62 m	Arm 3.05 m
GENERAL PURPOSE BUCKETS				
0.24	450	350	○	○
0.36	600	390	○	○
0.50	750	440	○	○
0.62	900	480	○	○
0.70	1000	500	○	●
0.78	1100	540	●	▲
0.87	1200	570	▲	■
1.00	1350	630	■	—
HEAVY DUTY BUCKETS				
0.26	450	420	○	○
0.38	600	480	○	○
0.51	750	550	○	○
0.65	900	620	○	○
0.70	1000	660	○	●
0.75	1050	680	●	●
0.78	1100	700	●	■
0.91	1200	740	■	—
GRADING BUCKETS				
0.59	1500	440*	○	○
0.72	1800	510*	○	●
0.80	2100	570*	●	●
DITCH CLEANING BUCKETS				
0.86	1830	630*	●	▲

* with bolt-on cutting edge
**Tilt angle 45° L/R Connect to Low-Flow Auxiliary Hydraulic Circuit

○ Rated material density up to 2 ton/m³
● Rated material density up to 1.6 ton/m³
▲ Rated material density up to 1.4 ton/m³
■ Rated material density up to 1.2 ton/m³
— Not applicable

EXPERTS FOR THE REAL WORLD
SINCE 1842

CASE CONSTRUCTION

BUILDING A STRONG CASE.

Since 1842, at CASE Construction Equipment we have lived by an unwavering commitment to build practical, intuitive solutions that deliver both efficiency and productivity.

We continually strive to make it easier for our customers to implement emerging technologies and new compliance mandates.

Today, our global scale combined with our local expertise enables us to keep customers' real-world challenges at the center of our product development.

The vast CASE dealers' network is always ready to support and protect your investment and exceed your expectations, while also providing you with the ultimate ownership experience.

Our goal is to build both stronger machines-and stronger communities. At the end of the day, we do what's right for our customers and our communities so that they can count on CASE.

CNH Industrial
Deutschland GmbH
Case Baumaschinen
Benzstr. 1-3 - D-74076 Heilbronn
DEUTSCHLAND

CNH Industrial
Maquinaria Spain, S.A.
Avenida Aragón 402
28022 Madrid - ESPAÑA

CNH Industrial France, S.A.
16-18 Rue des Rochettes
91150 Morigny-Champigny
FRANCE

CNH Industrial Italia Spa
Lungo Stura Lazio 19
10156, Torino
ITALIA

CASE Construction Equipment
Cranes Farm Rd
Basildon - SS14 3AD
UNITED KINGDOM

NOTE: Standard and optional fittings can vary according to the demands and specific regulations of each country. The illustrations may include optional rather than standard fittings - consult your Case dealer. Furthermore, CNH Industrial reserves the right to modify machine specifications without incurring any obligation relating to such changes.

Conforms to directive 2006/42/EC

CASECE.COM
00800-2273-7373

The call is free from a land line.
Check in advance with your Mobile Operator if you will be charged. Toll free number not available from all calling areas.

Form No. 20258GB - MediaCross Firenze - 01/25